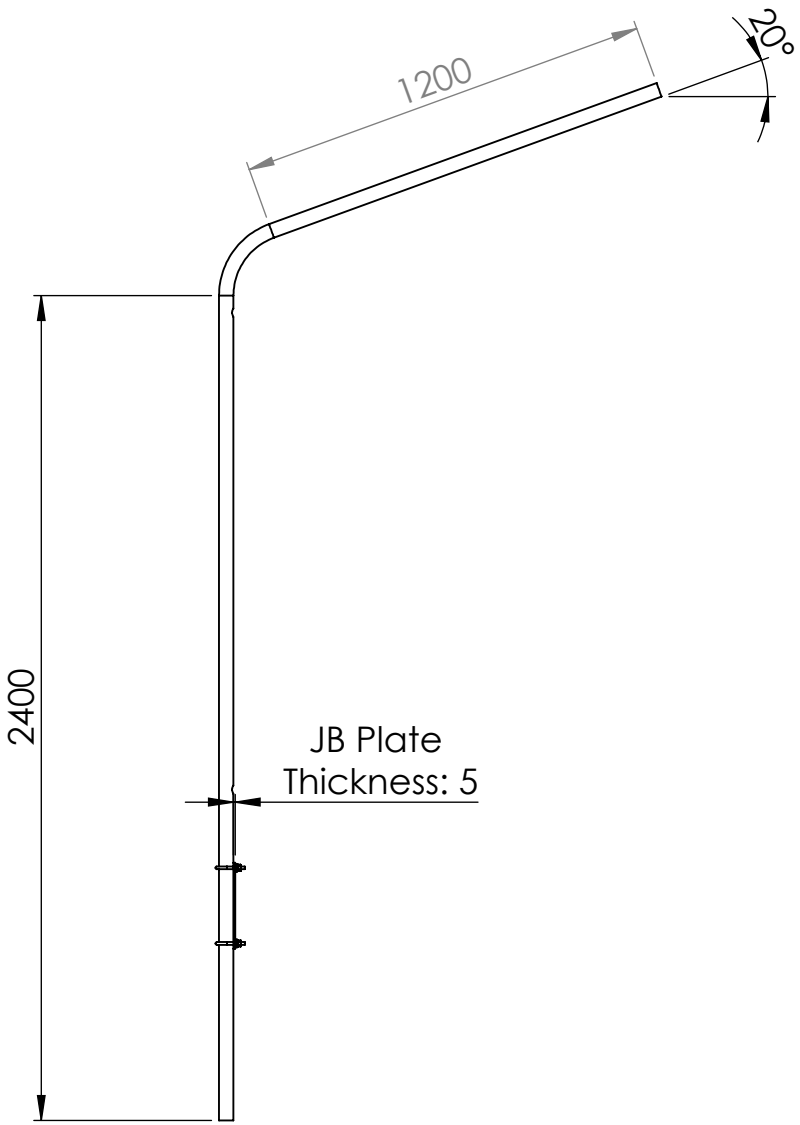

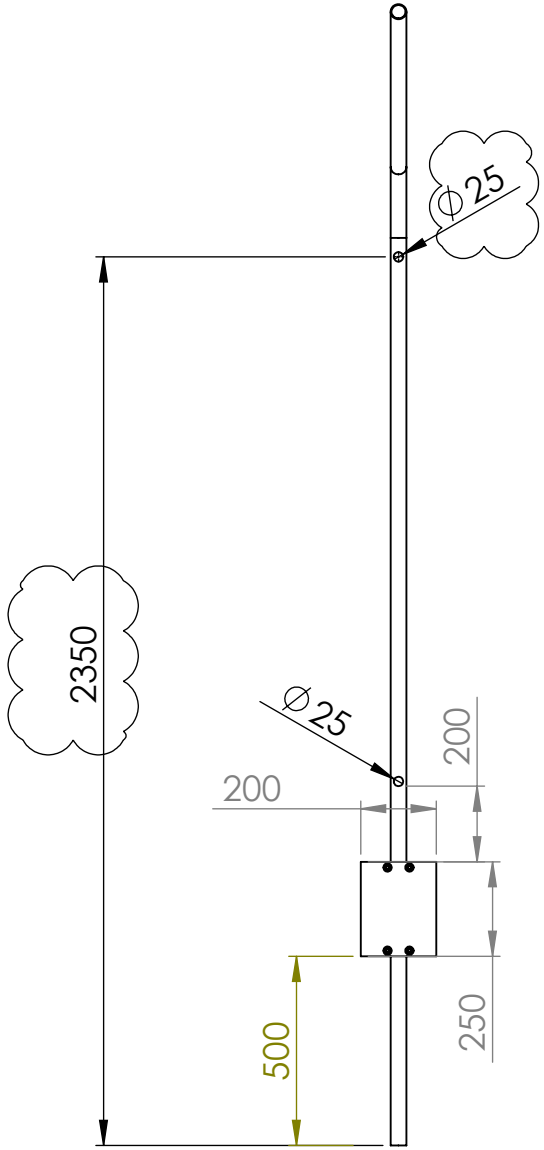

Units: mm	Tolerance : 5%	Quantity: 42	Customer: AZARAB Co.		
			TITLE: 2.2m lightig bracket handrail mounted		
Date 2025/7/19	MATERIAL: Hot Dipped Galvanized Carbon Steel		DWG NO: MHS-DWG-833-1		
CHK'D M.M					
Manager M.M	WEIGHT: gr		SCALE:1:50	SHEET 1 OF 1	A4

MEHRSAM SANA

REVISION 1